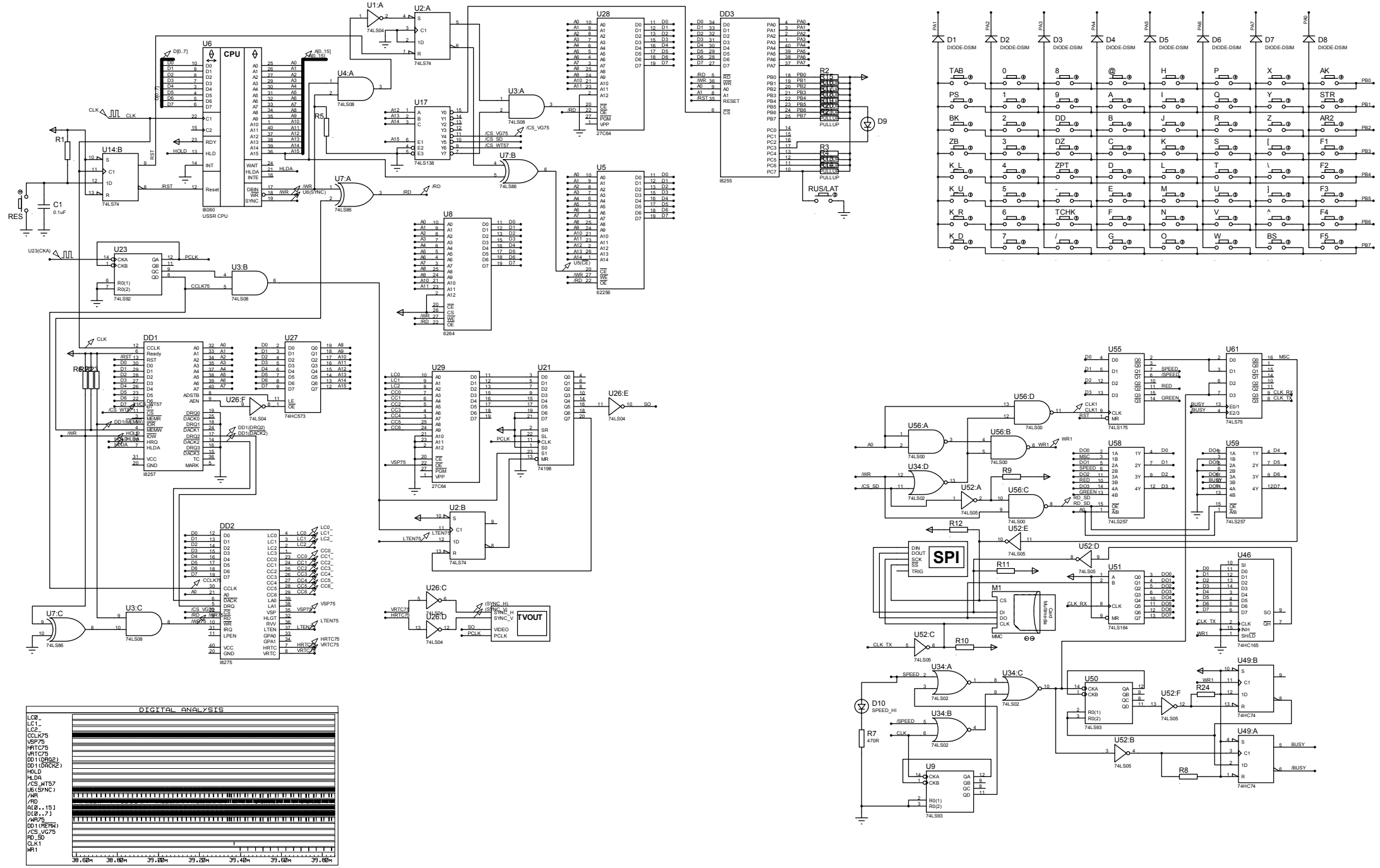
U1:A
74LS04
U2:A
74LS74
U6
CPU
i8080
USSR CPU
U4:A
74LS08
U17
74LS138
U3:A
74LS08
U28
27C64
DD3
i8255
R2
R3
D9
RUS/LAT
U14:B
74LS74
R1
C1
0.1uF
RES
U7:A
74LS86
U7:B
74LS86
U5
62256
U8
6264
U23
74LS92
U3:B
74LS08
DD1
i8257
U27
74HC573
U26:F
74LS04
U29
27C64
U21
74198
U26:E
74LS04
U2:B
74LS74
U26:C
74LS04
U26:D
74LS04
TVOUT
DD2
i8275
U7:C
74LS86
U3:C
74LS08
D1 D2 D3 D4 D5 D6 D7 D8
DIODE-DSIM
TAB 0 8 @ H P X AK
PS 1 9 A I Q Y STR
BK 2 DD B J R Z AR2
ZB 3 DZ C K S [F1
K_L 4 ZPT D L T \ F2
K_U 5 - E M U] F3
K_R 6 TCHK F N V ^ F4
K_D 7 / G O W BS F5
PULLUP
U55
74LS175
U61
74LS75
U56:D
74LS00
U56:A
74LS00
U56:B
74LS00
U34:D
74LS02
U52:A
74LS05
U56:C
74LS00
U58
74LS257
U59
74LS257
R9
R12
U52:E
74LS05
U52:D
74LS05
SPI
DIN
DOUT
SCK
SS
TRIG
R11
U51
74LS164
U46
74HC165
M1
Multimedia Card
MMC
U52:C
74LS05
R10
U34:A
74LS02
U34:C
74LS02
U50
74LS93
U52:F
74LS05
R24
U49:B
74HC74
D10
SPEED_HI
R7
470R
U34:B
74LS02
U52:B
74LS05
U49:A
74HC74
R8
U9
74LS93
DIGITAL ANALYSIS
LC0_
LC1_
LC2_
CCLK75
VSP75
HRTC75
VRTC75
DD1(DRQ2)
DD1(DACK2)
HOLD
HLDA
/CS_WT57
U6(SYNC)
/WR
/RD
A[0..15]
D[0..7]
/WR75
DD1(MEMW)
/CS_VG75
RD_SD
CLK1
WR1
38.60m 38.80m 39.00m 39.20m 39.40m 39.60m 39.80m