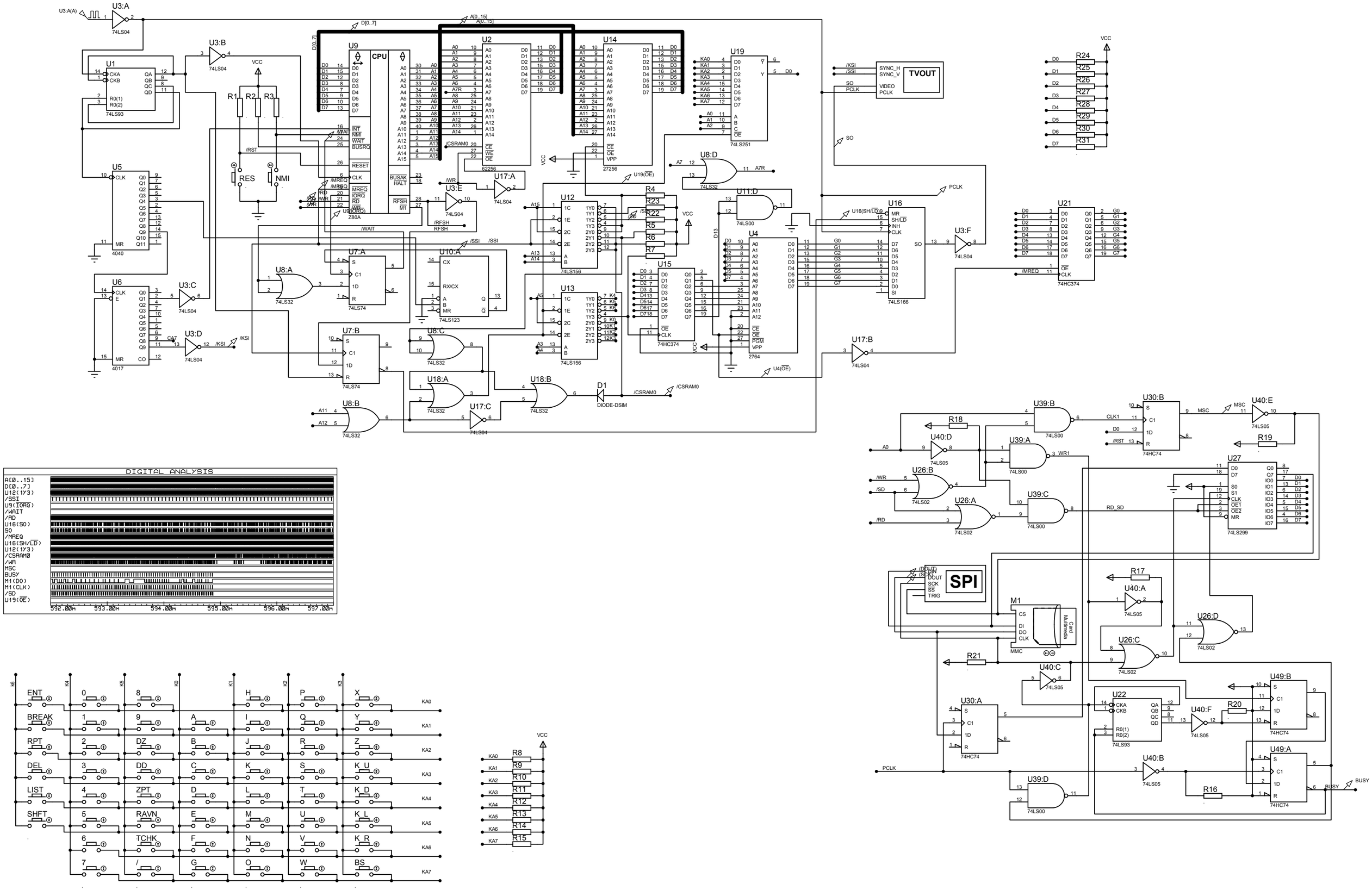

U3:A
74LS04
U3:B
74LS04
U1
74LS93
U5
4040
U6
4017
U3:C
74LS04
U3:D
74LS04
U9
CPU
Z80A
U2
62256
U14
27256
U19
74LS251
TVOUT
SYNC_H
SYNC_V
VIDEO
PCLK
R1
R2
R3
RES
NMI
U17:A
74LS04
U3:E
74LS04
U12
74LS156
U13
74LS156
U7:A
74LS74
U10:A
74LS123
U8:A
74LS32
U7:B
74LS74
U8:C
74LS32
U18:A
74LS32
U18:B
74LS32
U8:B
74LS32
U17:C
74LS04
D1
DIODE-DSIM
U8:D
74LS32
U11:D
74LS00
U4
2764
U15
74HC374
U16
74LS166
U3:F
74LS04
U21
74HC374
U17:B
74LS04
R24
R25
R26
R27
R28
R29
R30
R31
U39:B
74LS00
U30:B
74HC74
U40:E
74LS05
R18
R19
U40:D
74LS05
U39:A
74LS00
U26:B
74LS02
U26:A
74LS02
U39:C
74LS00
U27
74LS299
SPI
M1
MMC
Card Multimedia
R17
U40:A
74LS05
U26:D
74LS02
U26:C
74LS02
R21
U40:C
74LS05
U30:A
74HC74
U22
74LS93
U40:F
74LS05
R20
U49:B
74HC74
U40:B
74LS05
U49:A
74HC74
R16
U39:D
74LS00
DIGITAL ANALYSIS
A[0..15]
D[0..7]
U12(1Y3)
/SSI
U9(IORQ)
/WAIT
/RD
U16(SO)
SO
/MREQ
U16(SH/LD)
U12(1Y3)
/CSRAM0
/WR
MSC
BUSY
M1(DO)
M1(CLK)
/SD
U19(OE)
592.00m
593.00m
594.00m
595.00m
596.00m
597.00m
ENT
BREAK
RPT
DEL
LIST
SHFT
KA0
KA1
KA2
KA3
KA4
KA5
KA6
KA7
VCC
R8
R9
R10
R11
R12
R13
R14
R15